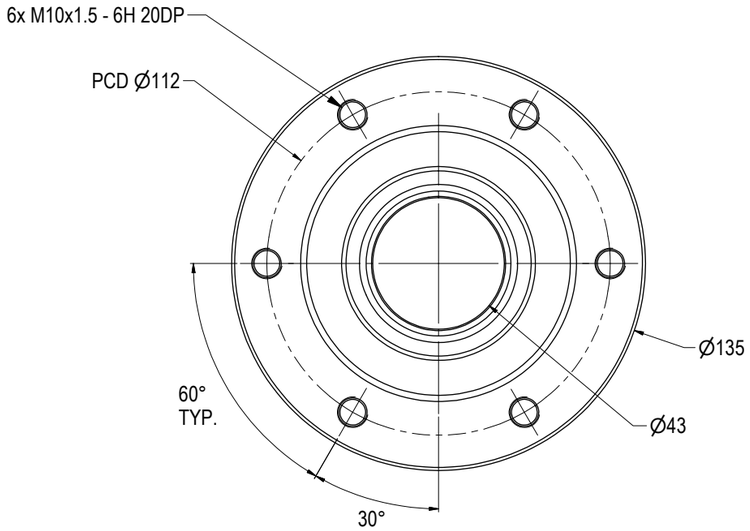

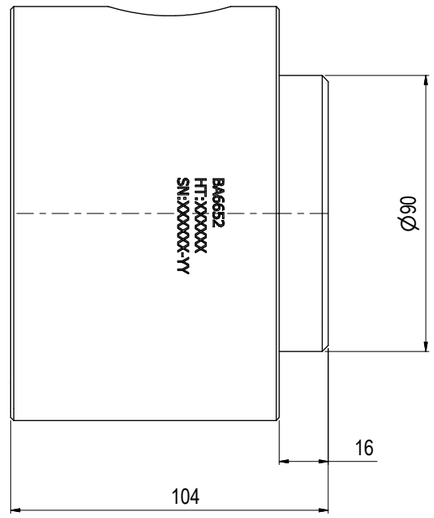

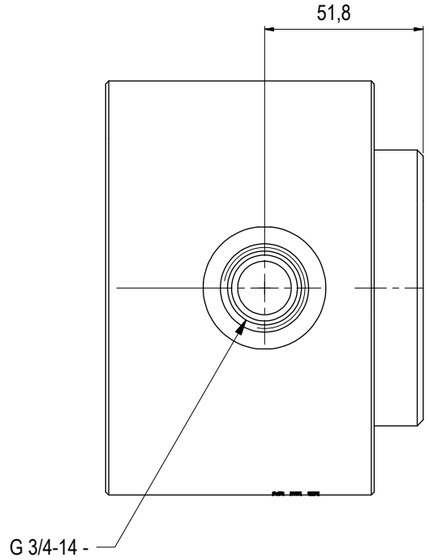

NOTE: 1
DESIGN CODE:
API 17H Type 1
API 6A

NOTE: 2
TECHNICAL CLASSIFICATION:

Article Type:	001-Hot Stabs
Main Group:	1.03. Ø43 Hot Stab
Intermediate Group:	1.2.02. Receptacle
Sub Group:	1.2.6.01. Single

NOTE: 3
INTERFACE INFORMATION:

Pressure Rating Bar:	690
Design Water Depth:	N/A
Material:	S32760 SUPER DUPLEX
Weight:	9,1 kg
Volume:	1,16 dm^3
Submerged Weight:	7,91 kg
Surface Area:	859 cm^2
Hydraulic:	3/4" BSP
Mechanical:	6xM10@PCD 112
Electrical:	N/A
Com. & Protocol:	N/A

NOTE: 4
ADDITIONAL INFORMATION:
Other hydraulic port interface can be delivered on customers request.

NOTE: 5
INTERNAL FAB/ASSY INFO:
Use O-ring BS 021 together with 3/4" BSP hydraulic fitting

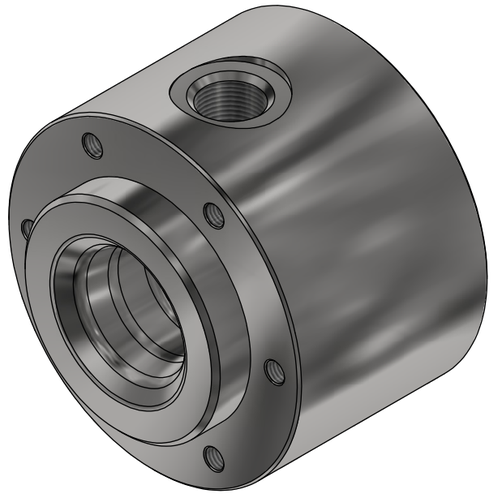

Rev.	Date	Reason for issue	Revision change	Made	Chk'd	Appr.
03	21.5.2015	9-IFU (Issued for Use)		HNJ	EKJ	WTJ
02	21.5.2015	9-IFU (Issued for Use)		WTJ	HSE	WTJ
01	15.5.2015	9-IFU (Issued for Use)		WTJ	HNJ	WTJ

BLUE LOGIC

This Drawing is the Property of Blue Logic AS © and must Not be Loaned, Reproduced or Transferred to others without written Permission

Unless Noted Otherwise:	Dwg Scale: NTS	Drawing title: Ø43 SP Rec 10k Interv BSP 3/4" ID17,5mm	
Dim. Tol: NS-ISO 2768-1	Dwg Proj:		
Roughness: Ra	Dwg Format: A3		
Fillet Rad: Corner Rmax:	Break Edges: (R. Alt. 45°) R= 0,1-0,5	Drawing number: BA6652	Rev. 03